HAMAMATSU
PHOTON IS OUR BUSINESS

PHOTOMULTIPLIER TUBE
R8520-406-001

FEATURES

- Low radioactivity
- 26 mm (1 Inch) square
- High UV sensitivity

APPLICATIONS

- High energy physics
- Astrophysics
- Academic research

SPECIFICATIONS

GENERAL

Parameter			Description / Value	Unit
Max. supply voltage	Between anode and cathode		900	V
Max. average anode current			0.1	mA
Spectral response range			160 to 650	nm
Peak spectral response			420	nm
Window material			Silica glass	—
Photocathode	Material		Bialkali	—
	Minimum effective area		20.5 × 20.5	mm
Dynode	Structure		Metal channel	—
	Number of stages		10	—
Cathode sensitivity	Luminous (2856 K)	Min.	80	μA/lm
		Typ.	100	
	Blue sensitivity index	Typ.	11.0	—
	Radiant at 420 nm	Typ.	90	mA/W
	Quantum efficiency at 175 nm	Typ.	30	%
	Quantum efficiency at 420 nm	Typ.	26.6	%
Anode sensitivity	Luminous (2856 K)	Min.	40	A/lm
		Typ.	100	
	Gain	Typ.	1×10^6	—
Anode dark current (After 30 min storage in darkness)		Typ.	2	nA
		Max.	20	
Time response	Rise time	Typ.	1.8	ns
	Transit time	Typ.	12.4	
	Transit time spread (FWHM)	Typ.	0.8	
Pulse linearity (2 % deviation)		Typ.	30	mA
Operating ambient temperature			-30 to +50	°C
Storage temperature			-80 to +50	°C
Weight			22.9	g

NOTE: Anode characteristics are measured with a voltage distribution ratio and supply voltage shown below.

VOLTAGE DISTRIBUTION RATIO AND SUPPLY VOLTAGE

Electrodes	K	G	Dy1	Dy2	Dy3	Dy4	Dy5	Dy6	Dy7	Dy8	Dy9	Dy10	P
Ratio	0.5	1.5	2	1	1	1	1	1	1	1	1	1	0.5

Supply voltage: 800 V, K: Cathode, G: Grid, Dy: Dynode, P: Anode

Subject to local technical requirements and regulations, availability of products included in this promotional material may vary. Please consult with our sales office.
Information furnished by HAMAMATSU is believed to be reliable. However, no responsibility is assumed for possible inaccuracies or omissions. Specifications are subject to change without notice. No patent rights are granted to any of the circuits described herein. ©2024 Hamamatsu Photonics K.K.

PHOTOMULTIPLIER TUBE R8520-406-001

Figure 1: Typical spectral response

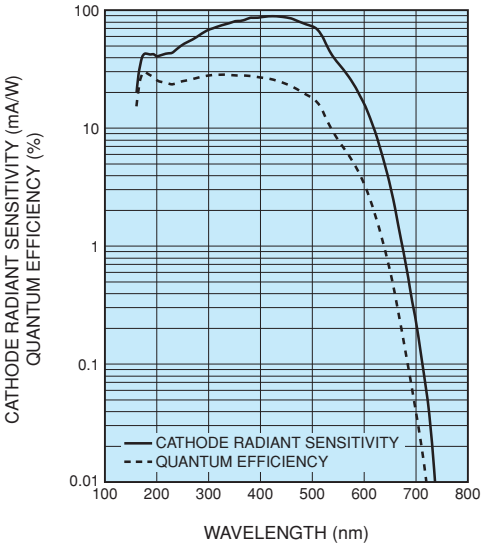

Figure 2: Typical gain

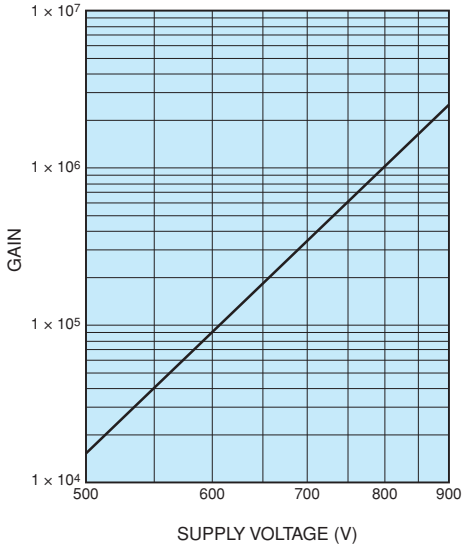

Figure 3: Dimensional outline (Unit: mm)

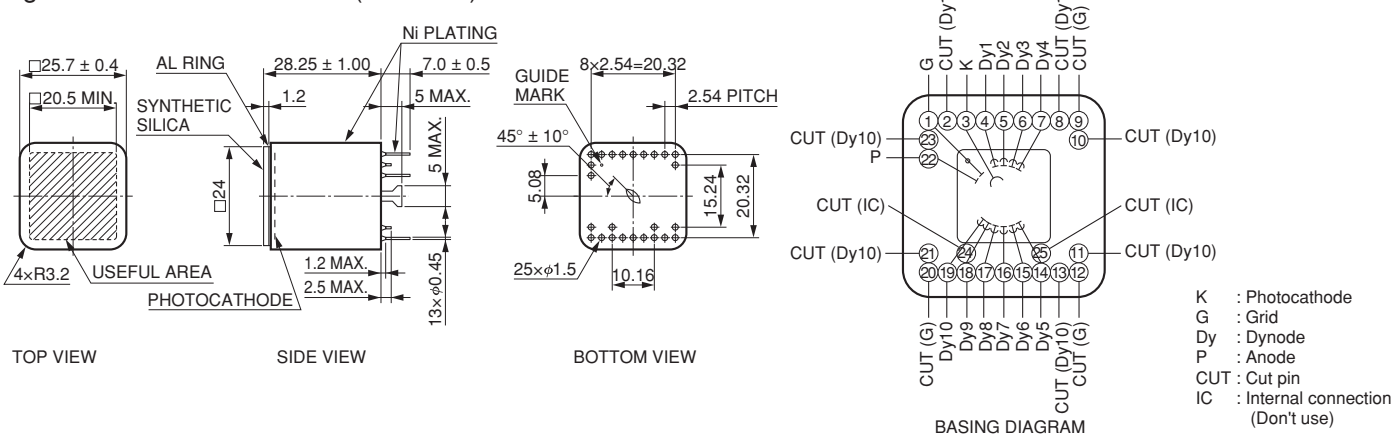

[ACCESSORIES] (Unit: mm)

●D type socket assembly E10411 **SOLD SEPARATELY**

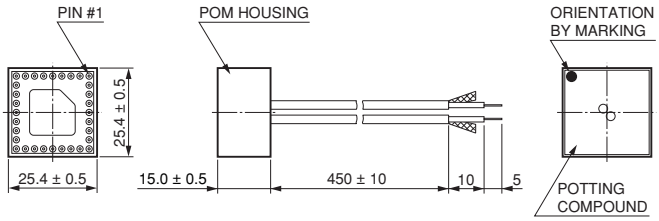

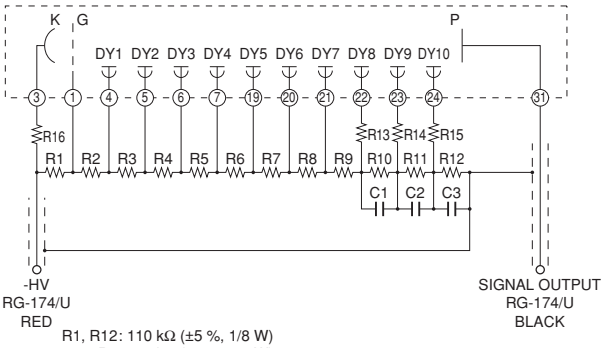

R1, R12: 110 kΩ (±5 %, 1/8 W)
R2: 330 kΩ (±5 %, 1/8 W)
R3: 430 kΩ (±5 %, 1/8 W)
R4 to R11: 220 kΩ (±5 %, 1/8 W)
R13 to R15: 51 Ω (±5 %, 1/8 W)
R16: 1 MΩ (±5 %, 1/8 W)
C1 to C3: 0.01 μF (200 V)

MAX HIGH VOLTAGE: -1000 V
DIVIDER CURRENT: 365 μA (-HV=-1000 V)
DIVIDER RATIO 0.5:1.5:2:1:1:1:1:1:1:1:1:0.5

Parameter	Value	Unit
Operating ambient temperature ④⑤	0 to +50	°C
Storage temperature ④	-15 to +60	°C

NOTE: ①Don't touch socket holes while high voltage is supplied in circuit.
②The pin numbers of R8520-406-001 and the pin numbers of DY5 and later of E10411 are different, but they are connected to the same dynode.
③When supplying voltage, do not exceed the maximum rating of the photomultiplier tube to be used.
④Please note that the storage temperature and operating ambient temperature differ from those of the R8520-406-001.
⑤No condension.

HAMAMATSU PHOTONICS K.K. **www.hamamatsu.com**

Electron Tube Division
314-5, Shimokanzo, Iwata City, Shizuoka Pref., 438-0193, Japan, Telephone: (81)539/62-5248, Fax: (81)539/62-2205

U.S.A.: HAMAMATSU CORPORATION: 360 Foothill Road, Bridgewater, NJ 08807, U.S.A., Telephone: (1)908-231-0960, Fax: (1)908-231-1218
Germany: HAMAMATSU PHOTONICS DEUTSCHLAND GMBH.: Arzbergerstr. 10, 82211 Herrsching am Ammersee, Germany, Telephone: (49)8152-375-0, Fax: (49)8152-265-8 E-mail: info@hamamatsu.de
France: HAMAMATSU PHOTONICS FRANCE S.A.R.L.: 19 Rue du Saule Trapu, Parc du Moulin de Massy, 91882 Massy Cedex, France, Telephone: (33)1 69 53 71 00, Fax: (33)1 69 53 71 10 E-mail: infos@hamamatsu.fr
United Kingdom: HAMAMATSU PHOTONICS UK LIMITED: 2 Howard Court,10 Tewin Road, Welwyn Garden City, Hertfordshire, AL7 1BW, UK, Telephone: (44)1707-294888, Fax: (44)1707-325777 E-mail: info@hamamatsu.co.uk
North Europe: HAMAMATSU PHOTONICS NORDEN AB: Torshamnsgatan 35, 16440 Kista, Sweden, Telephone: (46)8-509-031-00, Fax: (46)8-509-031-01 E-mail: info@hamamatsu.se
Italy: HAMAMATSU PHOTONICS ITALIA S.R.L.: Strada della Moia, 1 int. 6 20044 Arese (Milano), Italy, Telephone: (39)02-93 58 17 33, Fax: (39)02-93 58 17 41 E-mail: info@hamamatsu.it
China: HAMAMATSU PHOTONICS (CHINA) CO., LTD.: 1201, Tower B, Jiaming Center, 27 Dongsanhuan Beilu, Chaoyang District, 100020 Beijing, P.R. China, Telephone: (86)10-6586-6006, Fax: (86)10-6586-2866 E-mail: hpc@hamamatsu.com.cn
Taiwan: HAMAMATSU PHOTONICS TAIWAN CO., LTD.: 13F-1, No.101, Section 2, Gongdao 5th Road, East Dist., Hsinchu City, 300046, Taiwan(R.O.C) Telephone: (886)3-659-0080, Fax: (886)3-659-0081 E-mail: info@hamamatsu.com.tw

TPMH1342E06
SEP. 2024 IP