HAMAMATSU
PHOTON IS OUR BUSINESS

Photodiode modules

C10439 series

Integrates photodiode for precision photometry with low-noise amp

The C10439 series photodiode modules are high-precision photodetectors that integrate a photodiode and a current-to-voltage amplifier. The output from these photodiode modules is an analog voltage and can be easily checked with a voltmeter, etc. Since their sensitivity is switchable between two ranges (High/Low), highly accurate output can be obtained by selecting the proper sensitivity range that matches the light level to be detected.

Features

- **Voltage output for easy handling**
- **Two-range (High/Low) switching function**
- **Compact: 19 × 46 × 52 mm (C10439-01/-02/-03/-07/-08/-09)**
  19 × 50 × 52 mm (C10439-10/-11)
  19 × 50 × 75 mm (C10439-15)
- **Can be mounted on optical bench rod (M4)**

Applications

- **Precision photometry, light source power monitors, fluorescence detection of printed matter, illuminometers, color difference meters, brix meter, flowmeters (C10439-01/-02/-03/-07/-08/-09/-10/-11)**
- **Gas detection (CH_4, CO_2, CO, etc.)**
- **Spectrophotometers, radiation thermometers (C10439-15)**

Structure

Type no.	Photodiode type	Photosensitive area (mm)	Dimensions (mm)
C10439-01	Si	2.4 × 2.4	19 × 46 × 52
C10439-02		5.8 × 5.8	
C10439-03		10 × 10	
C10439-07		2.4 × 2.4	
C10439-08		5.8 × 5.8	
C10439-09		10 × 10	
C10439-10	InGaAs	ϕ1	19 × 50 × 52
C10439-11		ϕ3	
C10439-15	Si	2.4 × 2.4	19 × 50 × 75
	InGaAs	ϕ1	

Recommended conditions/Absolute maximum ratings (Ta=25 °C unless otherwise noted)

Type no.	Supply voltage Vs (V) Min.	Supply voltage Vs (V) Max.	Current consumption Is Max. Dark state (mA)	Capacitive load CL Max. (pF)	Output resistance Ro (Ω)	Absolute maximum ratings: Supply voltage Vs max (V)	Absolute maximum ratings: Operating temperature Topr*1 (°C)	Absolute maximum ratings: Storage temperature Tstg*1 (°C)
C10439-01	±5	±12	±2	1000	100	±13	0 to +50	-10 to +60
C10439-02								
C10439-03								
C10439-07								
C10439-08								
C10439-09								
C10439-10								
C10439-11								
C10439-15			±15					

*1: No dew condensation
When there is a temperature difference between a product and the surrounding area in high humidity environment, dew condensation may occur on the product surface. Dew condensation on the product may cause deterioration in characteristics and reliability.
Note: Exceeding the absolute maximum ratings even momentarily may cause a drop in product quality. Always be sure to use the product within the absolute maximum ratings.

Electrical and optical characteristics (Ta=25 °C, Vs=±12 V, unless otherwise noted)

Type no.	Spectral response range λ (nm)	Peak sensitivity wavelength λp (nm)		Saturation incident light level*2 Psat (nW) H range	Saturation incident light level*2 Psat (nW) L range	Photosensitivity*2 S (mV/nW) H range	Photosensitivity*2 S (mV/nW) L range	Conversion impedance Zt (V/A) H range	Conversion impedance Zt (V/A) L range	Cutoff frequency fc -3 dB (Hz) H range Lower	Cutoff frequency fc -3 dB (Hz) H range Upper	Cutoff frequency fc -3 dB (Hz) L range Lower	Cutoff frequency fc -3 dB (Hz) L range Upper
C10439-01	190 to 1100	960		23.6	2360	500	5	1×10^9	1×10^7	DC	10	DC	1 k
C10439-02													
C10439-03													
C10439-07				23600	2360000	0.5	0.005	1×10^6	1×10^4	DC	1 k	DC	100 k*3
C10439-08													
C10439-09													
C10439-10	500 to 1700	1550		11800	1180000	1	0.01						
C10439-11													
C10439-15	320 to 2600	Si	940	23300	233000	0.45	0.045	1×10^6	1×10^5	DC	10 k	DC	100 k*3
		InGaAs	2300	17500	175000	0.6	0.06						

*2: λ=λp
*3: Output amplitude=2 Vp-p

Type no.	Maximum output amplitude voltage Vfs Output current Io=1 mA (V)		Output offset voltage Vos Dark state (mV)		Output noise voltage*4 Vn Dark state (mVp-p)		Output offset voltage drift*5 Dark state (mV/day)	
	Min.	Max.	Min.	Max.	Typ.	Max.	Min.	Max.
C10439-01	+Vs - 0.5	+Vs - 0.2	-5	+5	2	5	-0.5	+0.5
C10439-02								
C10439-03								
C10439-07								
C10439-08								
C10439-09								
C10439-10								
C10439-11								
C10439-15	+Vs - 3.3		-50	+50	6	10	-1	+1

*4: Within frequency band
*5: Dark voltage variation per day, measured at 25 °C after a 10-minute (C10439-15: 60-minute) warm-up after power-on

Block diagram

C10439-01/-02/-03/-07/-08/-09/-10/-11

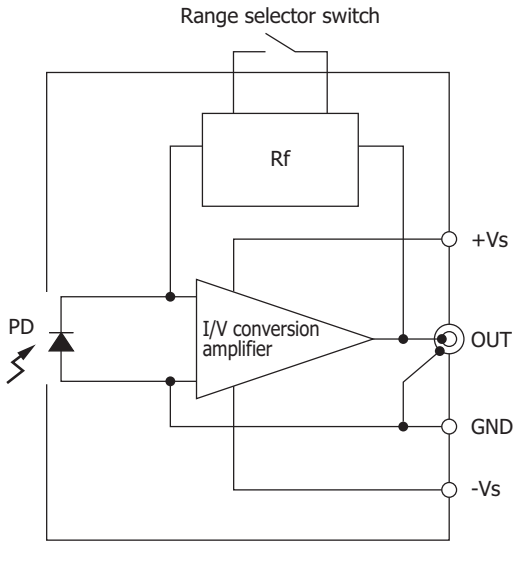

C10439-15

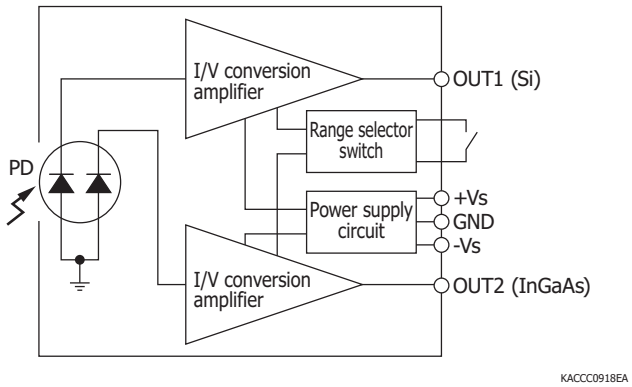

C10439-01/-02/-03

Output voltage vs. incident light level

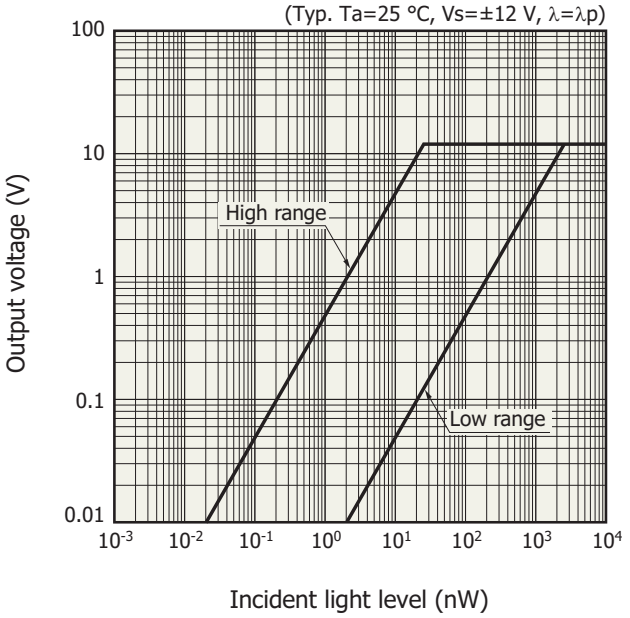

KACCB0172EB

Spectral response

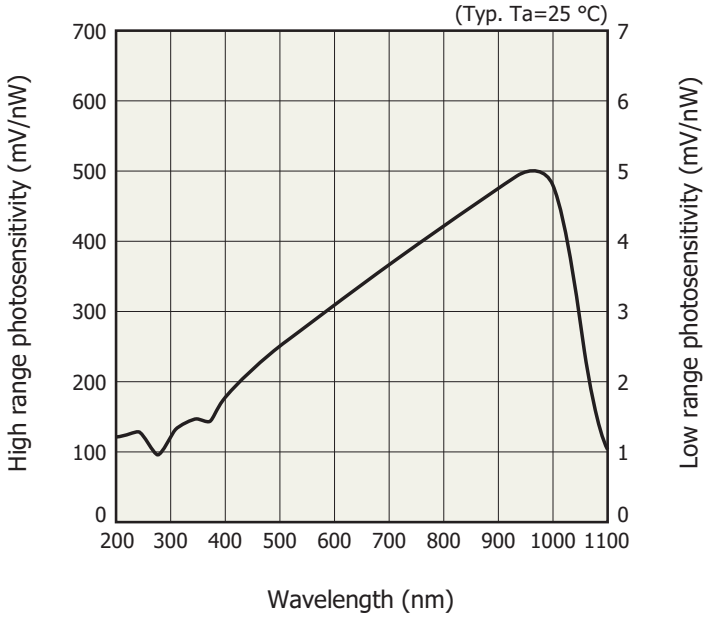

KACCB0345EB

C10439-07/-08/-09

Output voltage vs. incident light level

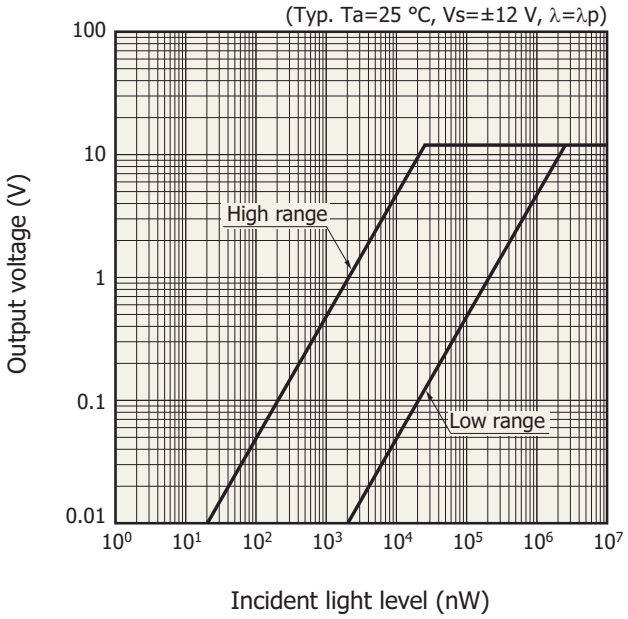

KACCB0344EB

Spectral response

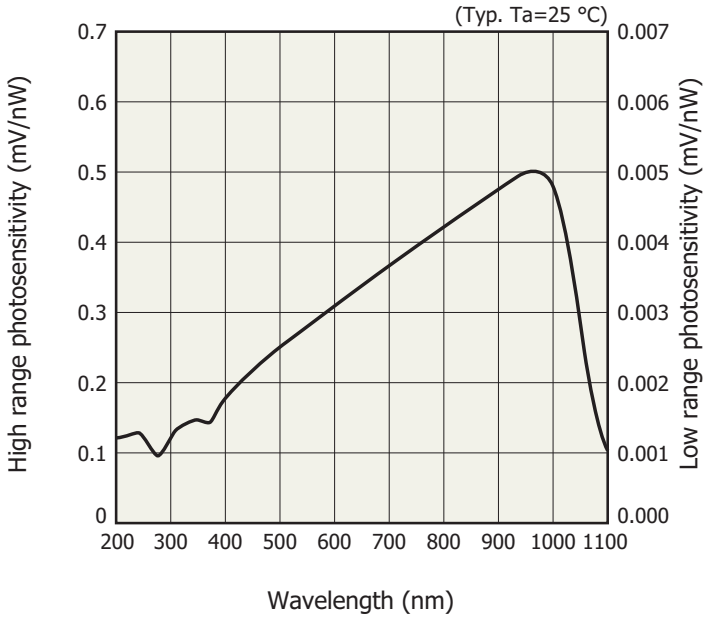

KACCB0346EB

C10439-10/-11

Output voltage vs. incident light level

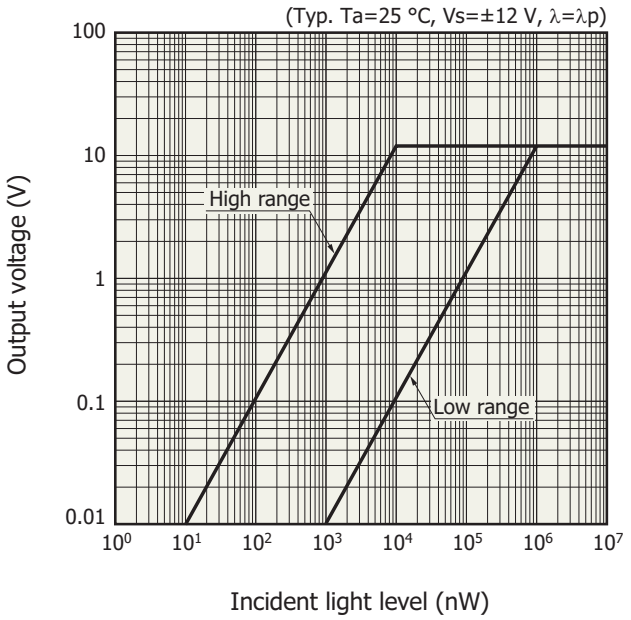

KACCB0347EB

Spectral response

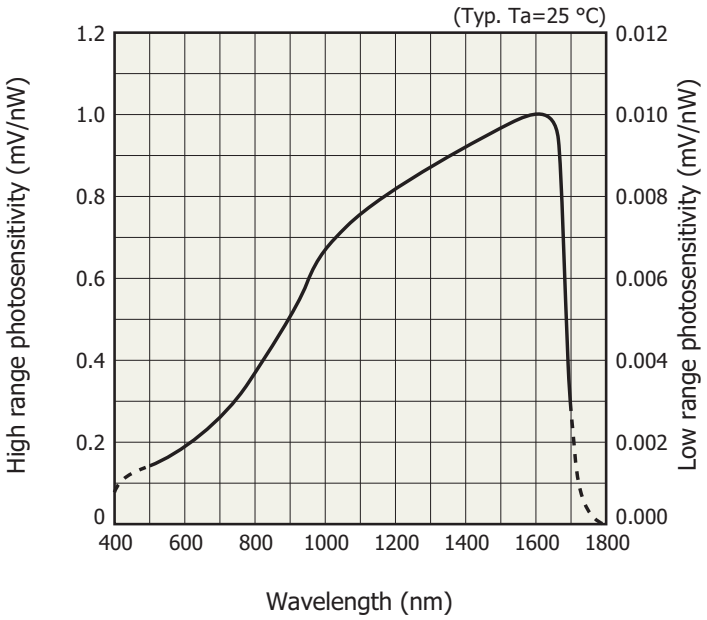

KACCB0348EB

C10439-15

Output voltage vs. incident light level

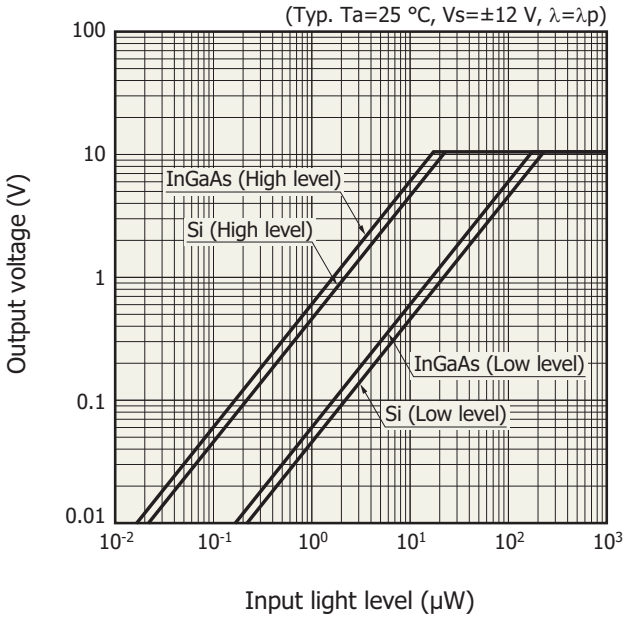

KACCB0534EA

Spectral response

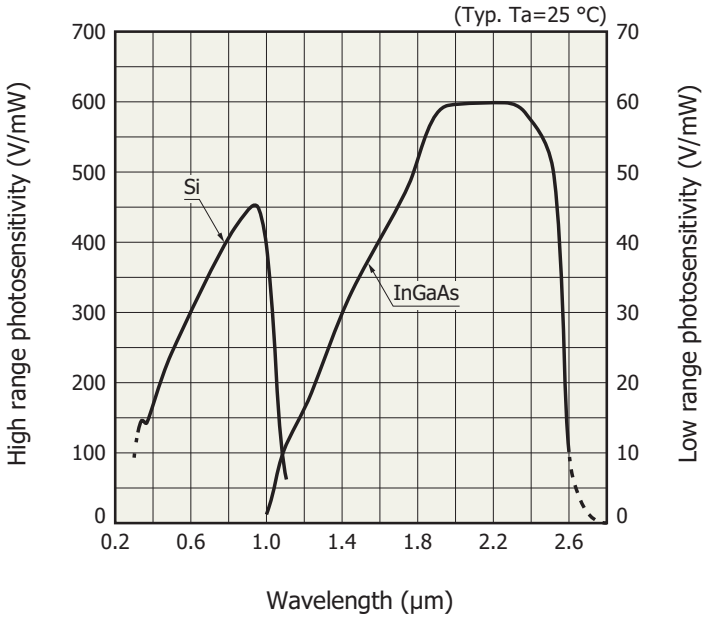

KACCB0535EA

Dimensional outlines (unit: mm, tolerance unless otherwise noted: ±0.2)

C10439-01/-07

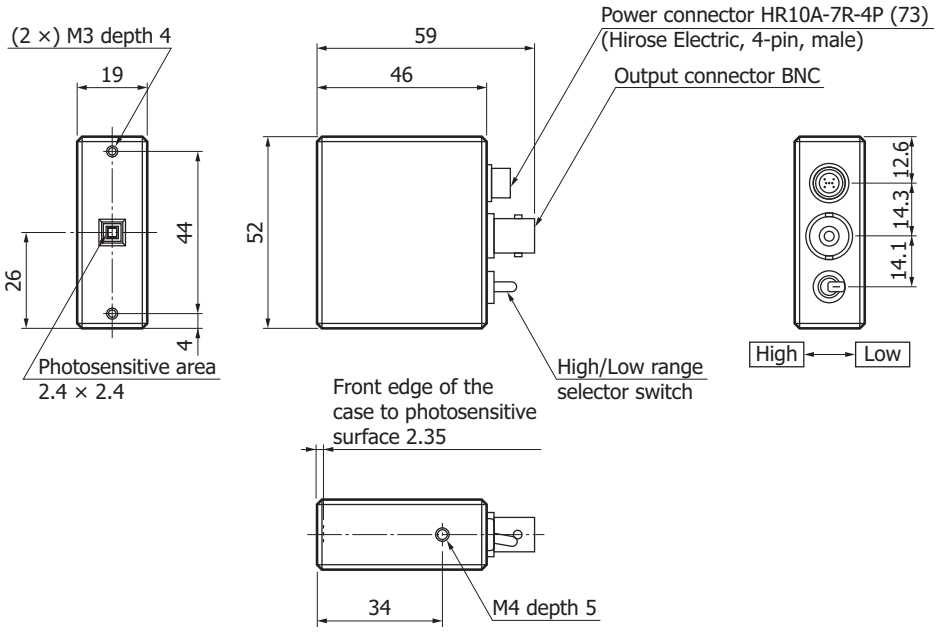

KACCA0203EB

C10439-02/-08

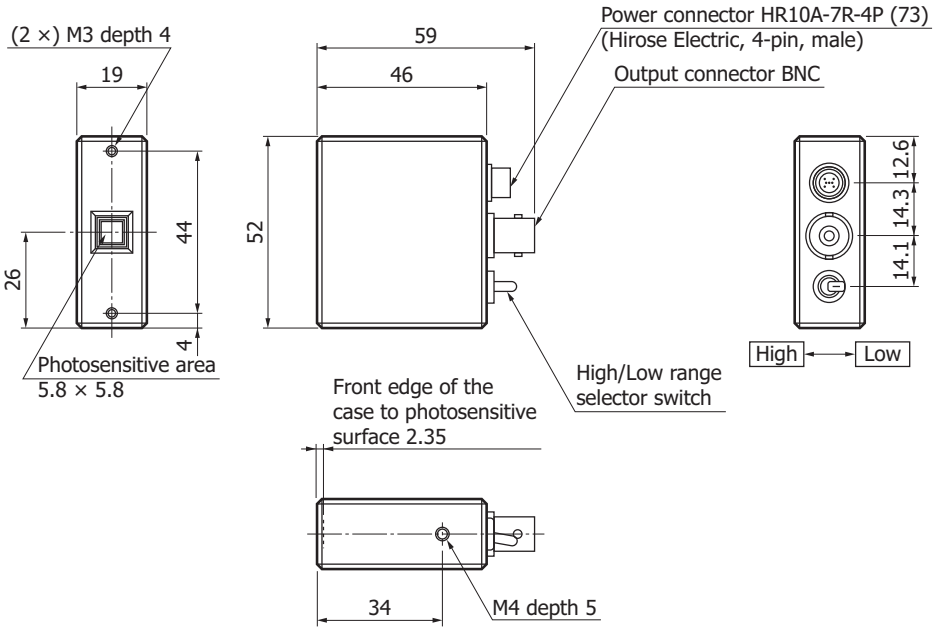

KACCA0204EB

C10439-03/-09

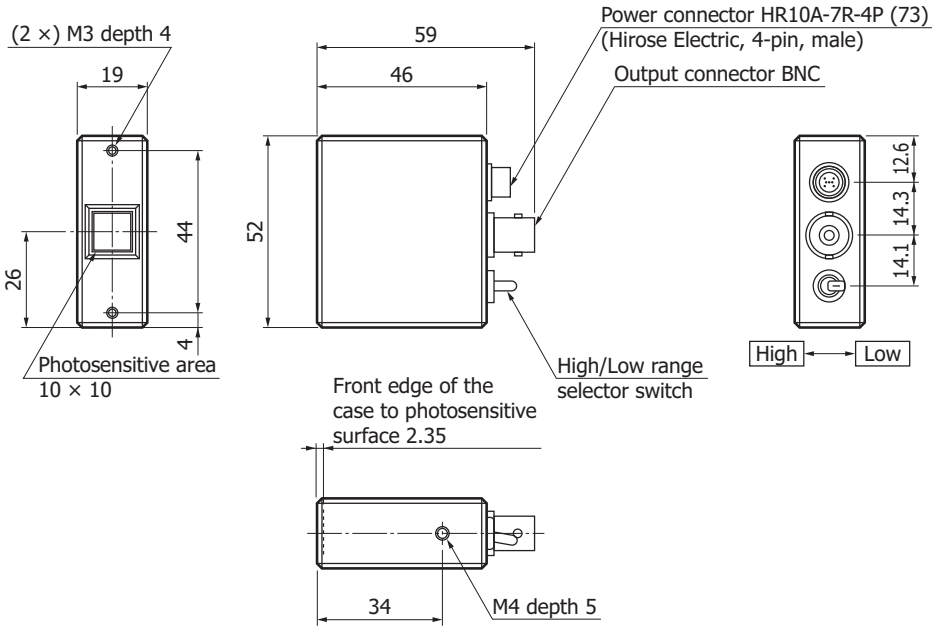

KACCA0205EB

C10439-10

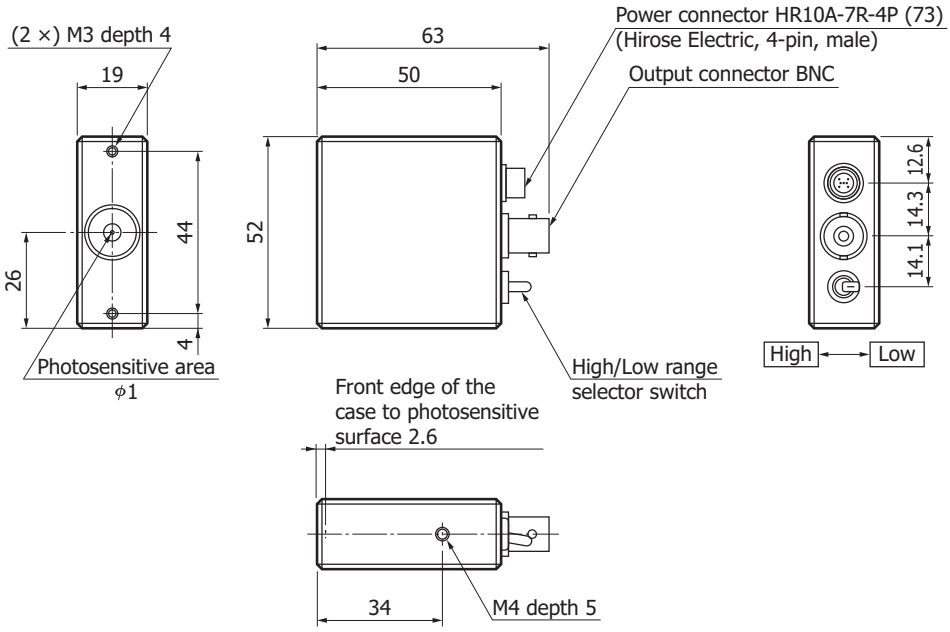

KACCA0327EA

C10439-11

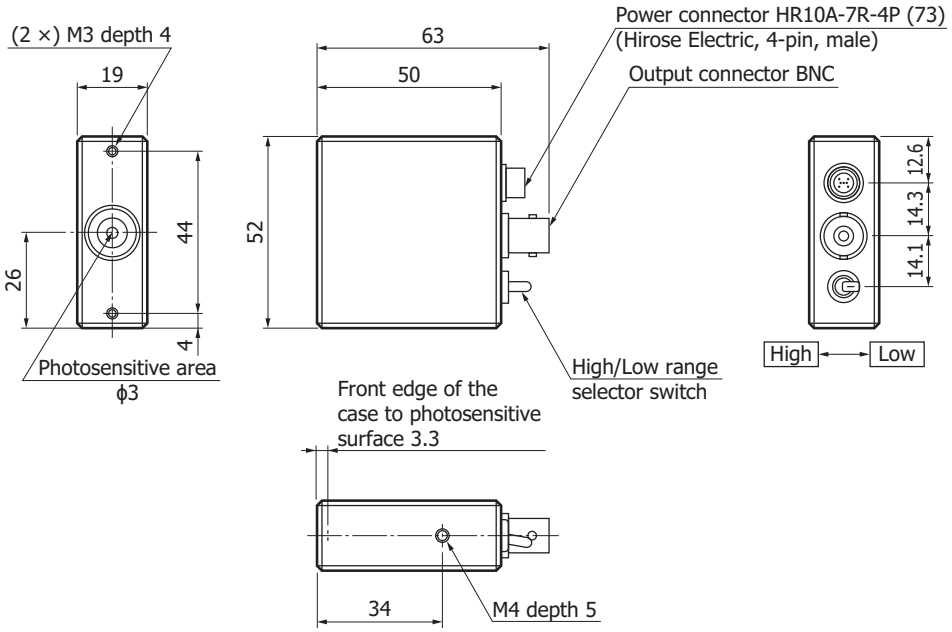

KACCA0328EA

C10439-15

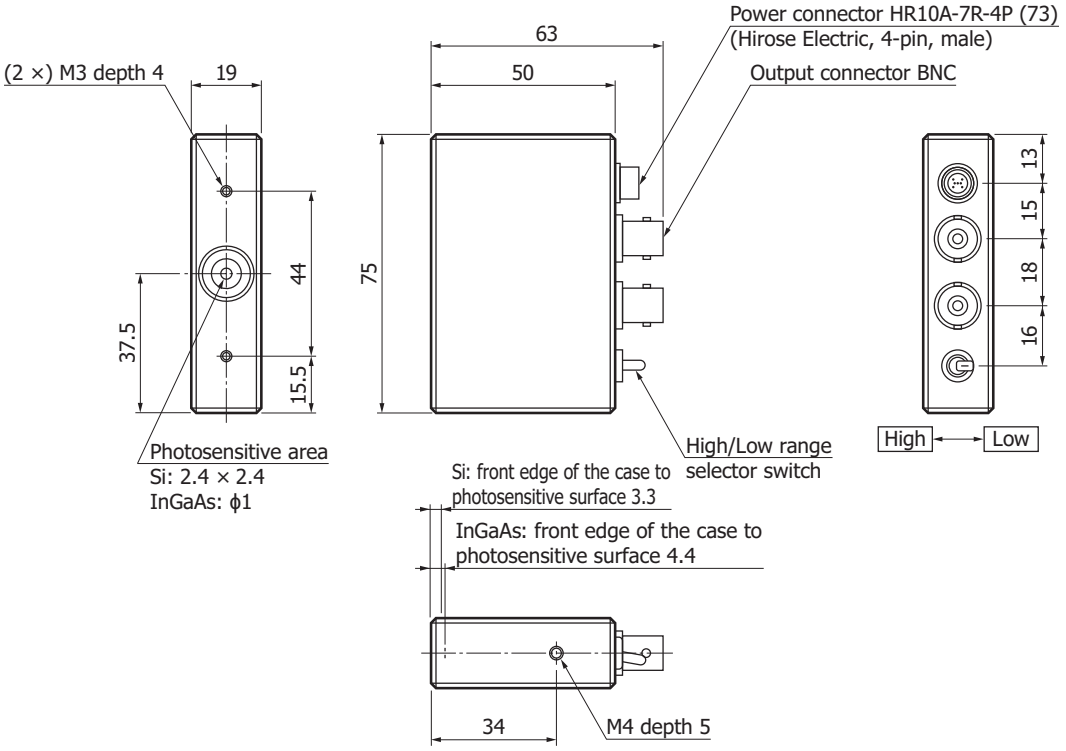

KACCA0419EA

Connection example

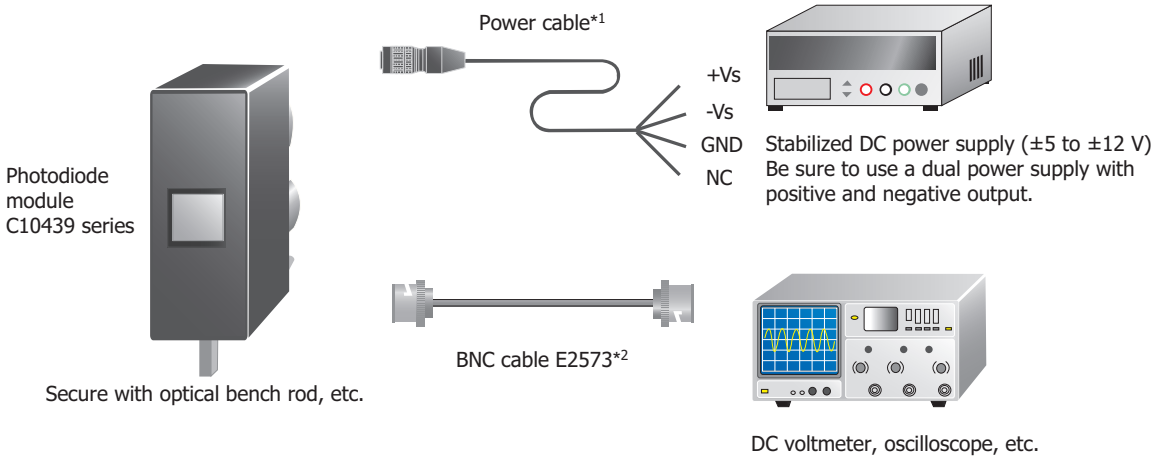

*1: Accessories
*2: Sold separately.
If you are using an off-the-shelf cable, make sure that it is within 3 m in length.

KACCC0365EE

Accessories (unit: mm)

· Instruction manual
· Cable for power supply (no connector on one end)

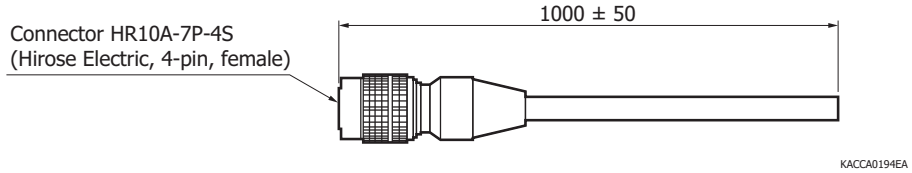

KACCA0194EA

Options (sold separately, unit: mm)

Optical fiber adapter A12781 series

This adapter is used to connect an optical fiber to the photodiode module.
Three connector types are available: FC, SC, and SMA.
Note:
· The optical fiber is not included.
· It may not be possible to monitor the total light level depending on the combinations of the photodiode, optical fiber, and fiber adapter that you are using. Select the appropriate components by carefully designing the optical system.

■ A12781-01 (for FC type optical fiber)

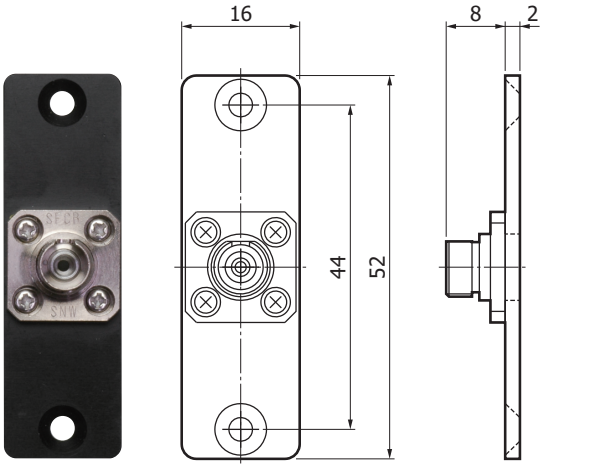

■ A12781-02 (for SC type optical fiber)

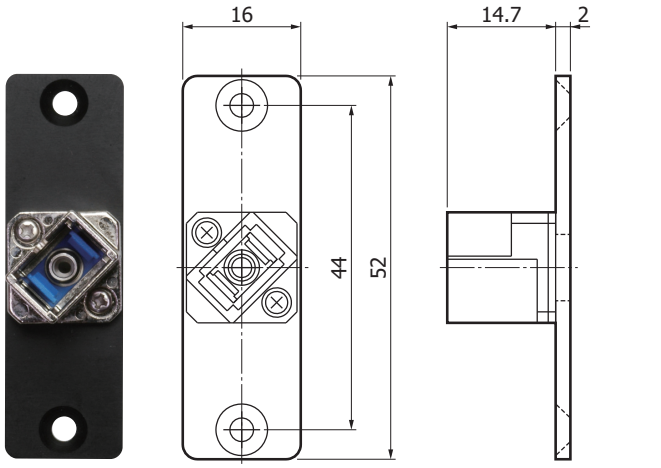

■ A12781-03 (for SMA type optical fiber)

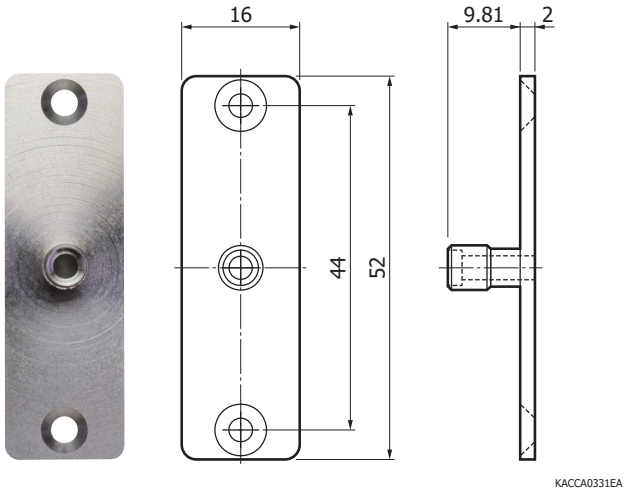

<Assembly procedure>
Fix the optical fiber adapter in place using the M3 screw holes in the front of the case. (M3 screws are supplied with the adapter.)

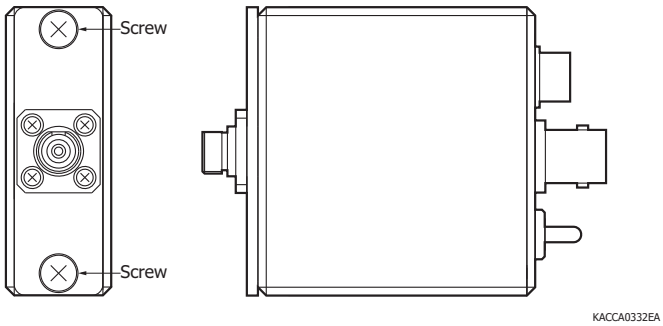

Optical fiber (SMA type) A9511

This SMA type optical fiber can be used with the photodiode module. The combination of this optical fiber with the SMA type optical fiber adapter (A12781-03) makes it easy to connect an optical fiber to the photodiode module.
Note: The SMA type optical fiber adapter (A12781-03) is not included.

■ Specifications
Photosensitive diameter: ϕ2 (bundled fiber)
Photosensitive numerical aperture: 0.56

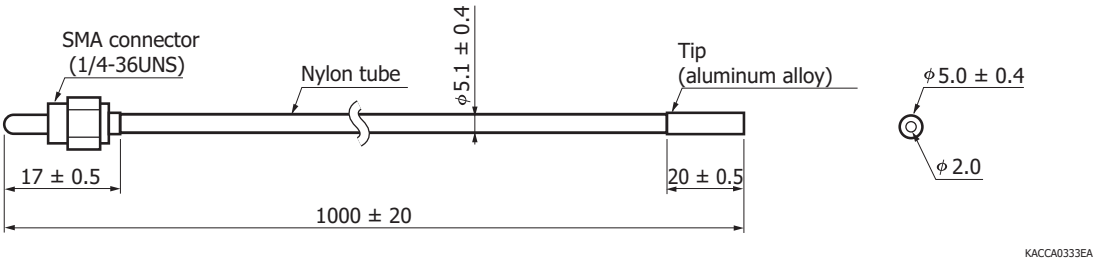

BNC cable E2573

This cable can be used to extract signals from the photodiode module.

■ Specifications
Cable specifications: 1.5D-QEV

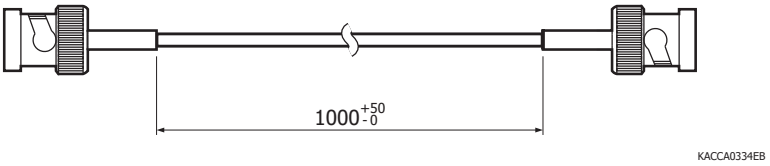

Related information

www.hamamatsu.com/sp/ssd/doc_en.html

■ Precaution
· Disclaimer

■ Catalog
· Technical note / Photosensor amplifiers, Photodiode modules

Information described in this material is current as of February 2025.
Product specifications are subject to change without prior notice due to improvements or other reasons. This document has been carefully prepared and the information contained is believed to be accurate. In rare cases, however, there may be inaccuracies such as text errors. Before using these products, always contact us for the delivery specification sheet to check the latest specifications.
The product warranty is valid for one year after delivery and is limited to product repair or replacement for defects discovered and reported to us within that one year period. However, even if within the warranty period we accept absolutely no liability for any loss caused by natural disasters or improper product use.
Copying or reprinting the contents described in this material in whole or in part is prohibited without our prior permission.

HAMAMATSU

www.hamamatsu.com

HAMAMATSU PHOTONICS K.K., Solid State Division
1126-1 Ichino-cho, Chuo-ku, Hamamatsu City, 435-8558 Japan, Telephone: (81)53-434-3311, Fax: (81)53-434-5184
U.S.A.: HAMAMATSU CORPORATION: 360 Foothill Road, Bridgewater, NJ 08807, U.S.A., Telephone: (1)908-231-0960, Fax: (1)908-231-1218
Germany: HAMAMATSU PHOTONICS DEUTSCHLAND GMBH: Arzbergerstr. 10, 82211 Herrsching am Ammersee, Germany, Telephone: (49)8152-375-0, Fax: (49)8152-265-8 E-mail: info@hamamatsu.de
France: HAMAMATSU PHOTONICS FRANCE S.A.R.L.: 19 Rue du Saule Trapu, Parc du Moulin de Massy, 91882 Massy Cedex, France, Telephone: (33)1 69 53 71 00, Fax: (33)1 69 53 71 10 E-mail: infos@hamamatsu.fr
United Kingdom: HAMAMATSU PHOTONICS UK LIMITED: 2 Howard Court,10 Tewin Road, Welwyn Garden City, Hertfordshire, AL7 1BW, UK, Telephone: (44)1707-294888, Fax: (44)1707-325777 E-mail: info@hamamatsu.co.uk
North Europe: HAMAMATSU PHOTONICS NORDEN AB: Torshamnsgatan 35, 16440 Kista, Sweden, Telephone: (46)8-509-031-00, Fax: (46)8-509-031-01 E-mail: info@hamamatsu.se
Italy: HAMAMATSU PHOTONICS ITALIA S.R.L.: Strada della Moia, 1 int. 6 20044 Arese (Milano), Italy, Telephone: (39)02-93 58 17 33, Fax: (39)02-93 58 17 41 E-mail: info@hamamatsu.it
China: HAMAMATSU PHOTONICS (CHINA) CO., LTD.: 1201, Tower B, Jiaming Center, 27 Dongsanhuan Beilu, Chaoyang District, 100020 Beijing, P.R. China, Telephone: (86)10-6586-6006, Fax: (86)10-6586-2866 E-mail: hpc@hamamatsu.com.cn
Taiwan: HAMAMATSU PHOTONICS TAIWAN CO., LTD.: 13F-1, No.101, Section 2, Gongdao 5th Road, East Dist., Hsinchu City, 300046, Taiwan(R.O.C) Telephone: (886)3-659-0080, Fax: (886)3-659-0081 E-mail: info@hamamatsu.com.tw

Cat. No. KACC1139E09 Feb. 2025 DN