HAMAMATSU
PHOTON IS OUR BUSINESS

PSD signal processing circuits, PSD modules

Contents

These are easy-to-use circuits and modules specifically designed for Hamamatsu PSDs (position sensitive detectors). PSD signal processing circuits are “circuit board” types on which a PSD (sold separately) can be mounted.

1. PSD signal processing circuits

PSD signal processing circuits have a current-to-voltage converter that converts photocurrent from a PSD into voltage. The signal is then processed (position conversion) and output as an analog voltage (analog output type) or converted into digital data (RS-232C) by an A/D converter and output (digital output type).

1 - 1 Features

- No complicated adjustments required
- Output voltage value shows position information as it is.
- Stable detection capability
- Compact design

1 - 2 Structure

(1) Analog output type

The analog output type C3683-02 is configured as shown in Figure 1-1. The current-to-voltage converter converts photocurrent from a PSD into voltage which is then processed by the signal processing circuit and is output as an analog voltage matching a corresponding position.

[Figure 1-1] Block diagram (C3683-02)

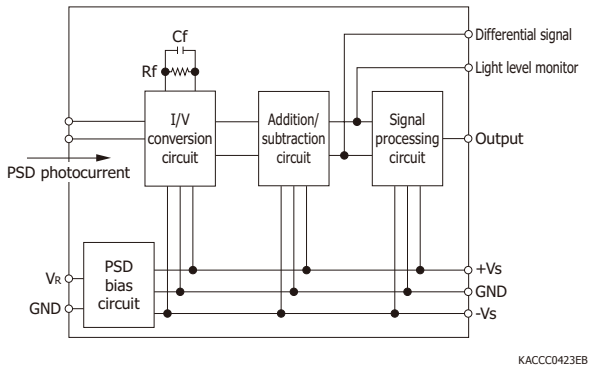

[Table 1-1] Hamamatsu PSD signal processing circuits

Type no.	Applicable PSD	Compatible signal	Output	Conversion impedance (V/A)	Response speed	Power supply
C3683-02	1D	DC	Analog	1×10^4 1×10^5 1×10^6	16 kHz (cutoff frequency)	Stabilized DC power supply (±15)
C4674-01	2D					
C9068-01	1D		Digital	1×10^5	5 ms min. (signal conversion time)	Stabilized DC power supply (+12)
C9069-01	2D					

Note: The output voltage (unit: V) values indicate the light spot position (unit: mm) from the center of the photosensitive area.

[Table 1-2] Connection example

PSD	PSD signal processing circuit	Power supply, measuring instrument, and PC
 3-conductor shielded cable or AWG#26 or equivalent twisted pair wires (no longer than 30 cm)  One-dimensional PSDs	Analog output  C3683-02	9-conductor unterminated cable Probe for voltmeter or oscilloscope (× 1)  Power supply (±15 V) 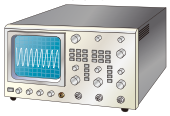 Voltmeter, oscilloscope, etc.  PC (with A/D conversion board)
	Digital output (RS-232C)  C9068-01	Cable with DC plug*  Power supply +12 V
	Digital output (RS-232C)  C9069-01	RS-232C cable  PC
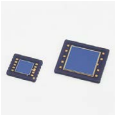  Board for mounting S5990-01, S5991-01  5-conductor shielded cable or AWG#26 or equivalent twisted pair wires (no longer than 30 cm) Two-dimensional PSDs	Analog output 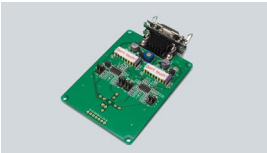 C4674-01	9-conductor unterminated cable Probe for voltmeter or oscilloscope (× 2)  Power supply (±15 V) 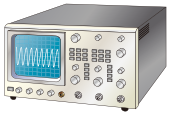 Voltmeter, oscilloscope, etc.  PC (with A/D conversion board)

* Accessory for PSD signal processing circuit

(2) Digital output type

The digital output type C9068-01 is configured as shown in Figure 1-3. The photocurrent from the PSD is converted to voltage by the I/V conversion circuit and converted to digital signal by the A/D converter, then the position is calculated and output by the microcontroller.

[Figure 1-2] Block diagram (C9068-01)

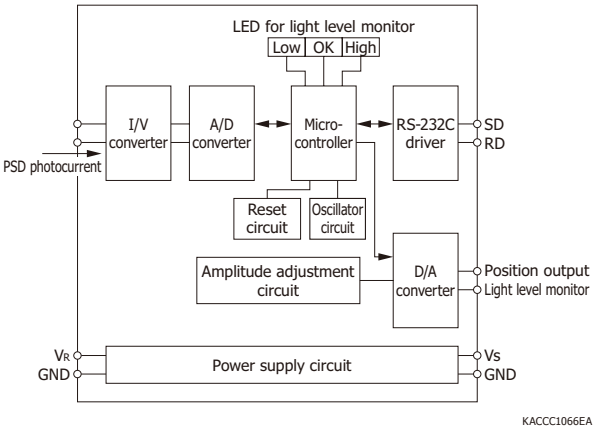

1 - 3 How to use

(1) Analog output type

The analog output type comes with a connector for wiring to the D-sub connector. Solder this wiring connector to a cable that connects to an oscilloscope (or voltmeter) and power supply (cable is not supplied).

(2) Digital output type

Use the digital output type by connecting the supplied cable with DC plug to the power supply. Connect the output connector to a PC with an RS-232C cable (cable not included).

2. PSD modules

PSD modules are position detection modules that integrate a PSD (or 4-segment Si photodiode) and current-to-voltage converter into a compact case.

2 - 1 Features

- Easy handling
- High precision analog voltage output
- Compact : only half size of a business card:
  34 × 40 × 44 (W × D × H) mm

2 - 2 Structure

[Figure 2-1] Block diagram (C10443-01/-02)

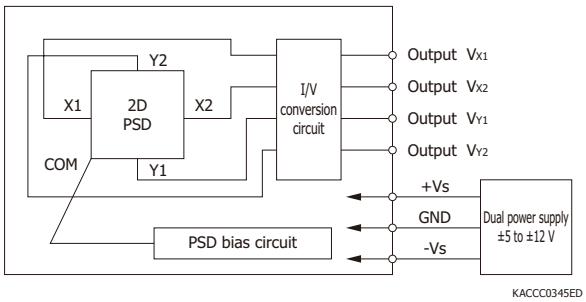

2 - 3 How to use (C10443-01/-02)

Position information can be obtained by putting output voltage from the PSD module into equations (2-1) and (2-2).

$$x = \frac{(V_{X2} + V_{Y1}) - (V_{X1} + V_{Y2})}{V_{X1} + V_{X2} + V_{Y1} + V_{Y2}} \times \frac{L}{2} \quad \cdots\cdots\cdots\cdots (2\text{-}1)$$

$$y = \frac{(V_{X2} + V_{Y2}) - (V_{X1} + V_{Y1})}{V_{X1} + V_{X2} + V_{Y1} + V_{Y2}} \times \frac{L}{2} \quad \cdots\cdots\cdots\cdots (2\text{-}2)$$

x, y: position (mm) of light spot relative to center of PSD photosensitive area
L: 4.5 mm (C10443-01)
10 mm (C10443-02)

[Table 2-1] Hamamatsu PSD modules

Type no.	Photosensor	Photosensitive area (mm)	Compatible signal	Output	Cutoff frequency (kHz)	Power supply
C10443-01	Two-dimensional PSD	4 × 4	AC, DC	Analog	16	Stabilized DC power supply (±5 to ±12 V)
C10443-02		9 × 9				
C10443-06	4-segment photodiode	10 × 10			160	

Note: Output can be set so that the output voltage (unit: V) value indicates the light spot position (unit: mm) from the center of the photosensitive area (excluding the C10443-06).

[Figure 2-2] Connection example (PSD module)

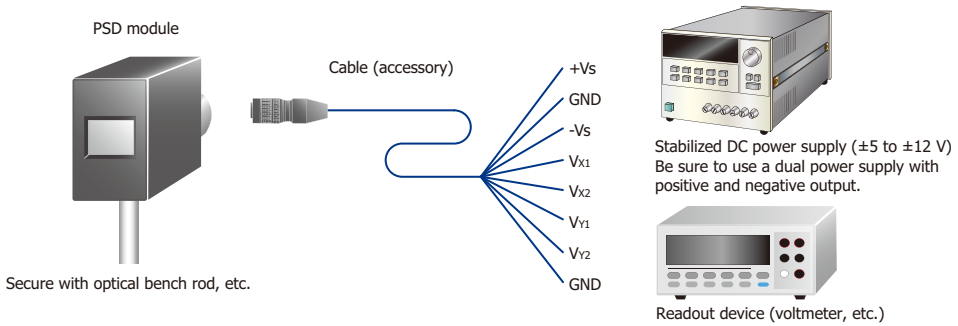

3. Applications

- Laser optical axis alignment
- Distance sensors
- Liquid level sensors
- Distortion measurement

HAMAMATSU

www.hamamatsu.com

HAMAMATSU PHOTONICS K.K., Solid State Division
1126-1 Ichino-cho, Chuo-ku, Hamamatsu City, 435-8558 Japan, Telephone: (81)53-434-3311, Fax: (81)53-434-5184
U.S.A.: HAMAMATSU CORPORATION: 360 Foothill Road, Bridgewater, NJ 08807, U.S.A., Telephone: (1)908 231 0960, Fax: (1)908 231 1218
Germany: HAMAMATSU PHOTONICS DEUTSCHLAND GMBH: Arzbergerstr. 10, 82211 Herrsching am Ammersee, Germany, Telephone: (49)8152 375 0, Fax: (49)8152 265 8 E mail: info@hamamatsu.de
France: HAMAMATSU PHOTONICS FRANCE S.A.R.L.: 19 Rue du Saule Trapu, Parc du Moulin de Massy, 91882 Massy Cedex, France, Telephone: (33)1 69 53 71 00, Fax: (33)1 69 53 71 10 E mail: infos@hamamatsu.fr
United Kingdom: HAMAMATSU PHOTONICS UK LIMITED: 2 Howard Court,10 Tewin Road, Welwyn Garden City, Hertfordshire, AL7 1BW, UK, Telephone: (44)1707 294888, Fax: (44)1707 325777 E mail: info@hamamatsu.co.uk
North Europe: HAMAMATSU PHOTONICS NORDEN AB: Torshamnsgatan 35, 16440 Kista, Sweden, Telephone: (46)8 509 031 00, Fax: (46)8 509 031 01 E mail: info@hamamatsu.se
Italy: HAMAMATSU PHOTONICS ITALIA S.R.L.: Strada della Moia, 1 int. 6 20044 Arese (Milano), Italy, Telephone: (39)02 93 58 17 33, Fax: (39)02 93 58 17 41 E mail: info@hamamatsu.it
China: HAMAMATSU PHOTONICS (CHINA) CO., LTD.: 1201, Tower B, Jiaming Center, 27 Dongsanhuan Beilu, Chaoyang District, 100020 Beijing, P.R. China, Telephone: (86)10 6586 6006, Fax: (86)10 6586 2866 E mail: hpc@hamamatsu.com.cn
Taiwan: HAMAMATSU PHOTONICS TAIWAN CO., LTD.: 13F 1, No.101, Section 2, Gongdao 5th Road, East Dist., Hsinchu City, 300046, Taiwan(R.O.C) Telephone: (886)3 659 0080, Fax: (886)3 659 0081 E mail: info@hamamatsu.com.tw

Cat. No. KACC9014E04 Feb. 2025 DN